INDEX OF REVISIONS

REV.	DESCRIPTION AND/OR AFFECTED PAGES
0	Original

INTERNA	REV. 0	REV. A	REV. B	REV. C	REV. D	REV. E	REV. F	REV. G	REV. H
DATE	15/10/2023								
PROJECT	EDF								
EXECUTED	BWWJ								
CHECKED	BEJH								
APPROVED	BEIW								

THE DATA OR PARTS THEREOF ARE PETROBRAS PROPERTY AND THUS MUST NOT BE USED IN ANY WAY WITHOUT WRITTEN PERMISSION.

CONTENTS

1. PURPOSE 3

2. APPLICABLE SPECIFICATIONS – GENERAL 3

3. PROJECT TECHNICAL SPECIFICATIONS AND DRAWINGS 3

3.1. Subsea Layout 3
3.2. Maritime Unit Data 4
3.2.1. P-40 4
3.2.2. P-48 8
3.2.3. P-51 9
3.2.4. P-53 12
3.2.5. P-56 16
3.2.6. P-58 19
3.2.7. FPSO Anna Nery 20
3.3. Subsea Equipment 23
3.4. Soil Data 23
3.5. Metocean Data 23
3.6. Riser Parameters 24
3.7. Internal Fluid Parameters and Chemical Injection 24

4. SCOPE OF FLEXIBLE PIPES AND COMPONENTS 24

5. ADDITIONAL REQUIREMENTS 24

6. REQUIRED TECHNICAL DOCUMENTATION AND SCHEDULE 25

INTERNA

INTERNA \ Qualquer Usuário

1. PURPOSE

The purpose of this Material Requisition is to specify flexible pipes, ancillary components, and accessories, and to establish minimum requirements for the design, qualification, manufacture, assembly, storage, handling, installation, operation, testing, retrieval, and reuse of these products.

With the information herein provided, the manufacturer shall prepare and submit to Petrobras the Technical Documentation for supplying the products. The Products shall be designed considering the specifications and data presented in this document.

2. APPLICABLE SPECIFICATIONS – GENERAL

The pipe structures shall be designed considering the specifications informed in [1]. The manufacturer shall verify the suitability of the pipe structures, riser configuration and perform a detailed engineering for the specific project according to the information presented in 3, 4 and 5.

In case specific project parameters are not fully covered by the pipe envelope, the manufacturer shall consult Petrobras before making any decision about the requirements to be adopted for flexible pipe design.

Ref.	Designation	Title	Ed.
[01]	I-ET-3000.00-1519-291-PZ9-003	Functional Requirements for Standard Flexible Pipe Applications	A

Note: The manufacturer shall consider the version B of the technical specifications PAZ-001 through PAZ-011, mentioned in [01].

3. PROJECT TECHNICAL SPECIFICATIONS AND DRAWINGS

3.1. Subsea Layout

Ref.	Designation	Title	Ed.
[02]	DE-3010.0V-1500-942-SRP-011	Arranjo Submarino de Interligação dos Poços do Projeto Integrado Complementar de Jubarte (P-57) (Opção 1)	B
[03]	DE-3010.0V-1500-942-SRP-009	Arranjo Submarino de Interligação dos Poços do Projeto Integrado Complementar de Jubarte (P-58)	E
[04]	DE-3912.00-1500-942-SRP-117	Arranjo Submarino de Interligação dos Poços Produtores B32P3, B4P2, B30P2, B32P2, MP2 e Injetor IM2 (Projeto RJ0465)	G
[05]	DE-3551.00-1500-942-SRP-015	Arranjo Submarino de Interligação dos Poços MCB-13, MCB-18, P1, P2, I2 E ENC-IH1 Opção 3	E
[06]	DE-3912.00-1500-942-SRP-137	Arranjo Submarino de Interligação do Poço 8-MLS-133HPA (Projeto RJ0121A)	0
[07]	DE-3913.00-1500-942-R1N-034	Arranjo Submarino de Interligação do poço LOC1	0
[08]	DE-3913.00-1500-942-R1N-049	Arranjo Submarino de interligação do poço 9-MLL-91-RJS	0

INTERNA

INTERNA \ Qualquer Usuário

Ref.	Designation	Title	Ed.
[09]	DE-3534.00-1500-942-R1N-009	Arranjo Submarino de Interligação do Gasoduto Secundário II do Campo de Marlim	A
[10]	DE-3913.00-1500-942-R1N-035	Arranjo Submarino de Interligação dos Poços – ISW e MLL-038HP	0

3.2. Maritime Unit Data

3.2.1. P-40

a) Support Drawing

Ref.	Designation	Title	Ed.
[11]	DE-3912.00-1500-942-PMU-048	Plataforma P-40 Posição dos Suportes (01)	AF
[12]	DE-3010.57-1323-140-XJN-074	Structure of Risers Supports on Starboard Pontoon	G
[13]	DE-3010.57-6500-941-PGT-007	P-40 - PB-200 Sistema de Suspensão - "I"-Tube para Dutos de 6"	B
[14]	DE-3010.57-6500-941-PGT-006	P-40 - PB-200 Sistema de Suspensão - "I"-Tube para Dutos de 4" e Umbilicais	B

b) Riser Azimuth, Top Angle and Support Coordinates

Table 1 - Support information P-40.

P-40									
Function	Support number	Ø ID (riser)	Support Type	I-tube Ø	Support Azimuth[1] (°)	Support coordinates [2] *(See references figure below)*			Support Top angle (°)
						X (m)	Y (m)	Z (m)	
WATER INJ.	2	6"	FIXED	-	7	-5,402	12,258	27,878	7
WATER INJ.	4	6"	FIXED	-	7	-5,402	10,008	27,878	7
OIL EXPORT	5	10"	FIXED	-	7	0,448	8,608	27,878	7
WATER INJ.	7	6"	FIXED	-	7	0,448	6,118	27,878	7
SERVICE	8	4"	FIXED	-	7	0,448	4,993	27,878	7
PRODUCTION	10	6"	FIXED	-	7	0,448	2,778	27,878	7
SERVICE	11	2,5"	FIXED	-	7	0,448	1,653	27,878	7
PRODUCTION	13	6"	FIXED	-	7	0,448	-0,562	27,878	7
SERVICE	14	2,5"	FIXED	-	7	0,448	-1,687	27,878	7
PRODUCTION	16	6"	FIXED	-	7	0,448	-3,902	27,878	7
SERVICE	17	2,5"	FIXED	-	7	0,448	-5,027	27,878	7
PRODUCTION	19	6"	FIXED	-	7	0,448	-7,242	27,878	7
SERVICE	20	2,5"	FIXED	-	7	-5,402	-8,367	27,878	7
PRODUCTION	22	6"	FIXED	-	7	-5,402	-10,582	27,878	7

INTERNA

INTERNA \ Qualquer Usuário

WATER INJ.	24	6"	FIXED	-	7	-5,402	-12,832	27,878	7
GAS IMPORT	26	9,13"	I-TUBE	30"	97	-12,716	-23,790	1,100	7
GAS IMPORT	28	6"	I-TUBE	22"	97	-14,916	-23,790	1,100	7
SERVICE	29	4"	I-TUBE	18"	97	-20,916	-23,790	1,100	7
PRODUCTION	31	6"	I-TUBE	22"	97	-22,916	-23,790	1,100	7
SERVICE	32	4"	I-TUBE	18"	97	-26,516	-23,790	1,100	7
PRODUCTION	34	6"	I-TUBE	22"	97	-28,316	-23,790	1,100	7
SERVICE	35	4"	I-TUBE	18"	97	-29,216	-23,790	1,100	7
PRODUCTION	37	6"	I-TUBE	22"	97	-31,016	-23,790	1,100	7
WATER INJ.	39	6"	I-TUBE	22"	97	-32,816	-23,790	1,100	7
WATER INJ.	41	6"	I-TUBE	22"	97	-34,616	-23,790	1,100	7
WATER INJ.	43	6"	I-TUBE	22"	97	-36,416	-23,790	1,100	7
SERVICE	44	2,5"	FIXED	-	187	-53,090	-29,568	27,878	7
PRODUCTION	46	6"	FIXED	-	187	-53,090	-27,353	27,878	7
SERVICE	47	4"	FIXED	-	187	-53,090	-26,193	27,878	7
PRODUCTION	49	6"	FIXED	-	187	-53,090	-23,703	27,878	7
SERVICE	50	4"	FIXED	-	187	-53,090	-22,303	27,878	7
PRODUCTION	52	6"	FIXED	-	187	-53,090	-19,813	27,878	7
WATER INJ.	54	6"	FIXED	-	187	-53,090	-17,288	27,878	7
OIL IMPORT.	55	9,13"	FIXED	-	187	-53,090	-15,888	27,878	7
GAS IMPORT	57	8"	FIXED	-	187	-53,090	-13,158	27,878	7
WATER INJ.	59	4"	FIXED	-	187	-53,090	-10,668	27,878	7
WATER INJ.	61	6"	FIXED	-	187	-53,090	-8,418	27,878	7
WATER INJ.	63	6"	FIXED	-	187	-53,090	8,605	27,878	7
SERVICE	64	2,5"	FIXED	-	187	-53,090	9,730	27,878	7
PRODUCTION	66	6"	FIXED	-	187	-53,090	11,945	27,878	7
SERVICE	67	4"	FIXED	-	187	-53,090	13,070	27,878	7
PRODUCTION	69	6"	FIXED	-	187	-53,090	15,285	27,878	7
SERVICE	70	2,5"	FIXED	-	187	-53,090	16,410	27,878	7
PRODUCTION	72	6"	FIXED	-	187	-53,090	18,625	27,878	7
SERVICE	73	2,5"	FIXED	-	187	-53,090	19,750	27,878	7
PRODUCTION	75	6"	FIXED	-	187	-53,090	21,965	27,878	7
SERVICE	76	2,5"	FIXED	-	187	-53,090	23,090	27,878	7
PRODUCTION	78	6"	FIXED	-	187	-53,090	25,305	27,878	7
OIL EXPORT	80	9,13"	I-TUBE	30'	277	-35,991	23,790	1,100	7
OIL EXPORT	81	9,13"	I-TUBE	30'	277	-34,796	23,790	1,100	7
GAS SPARE	82	4"	I-TUBE	18"	277	-33,716	23,790	1,100	7
WATER INJ.	84	6"	I-TUBE	22"	277	-31,916	23,790	1,100	7
WATER INJ.	86	6"	I-TUBE	22"	277	-30,116	23,790	1,100	7
WATER INJ.	88	6"	I-TUBE	22"	277	-28,316	23,790	1,100	7
WATER INJ.	90	6"	I-TUBE	22"	277	-26,516	23,790	1,100	7
SERVICE	91	4"	I-TUBE	18"	277	-22,916	23,790	1,100	7

INTERNA

INTERNA \ Qualquer Usuário

PRODUCTION	93	6"	I-TUBE	22"	277	-20,916	23,790	1,100	7
SERVICE	94	4"	I-TUBE	18"	277	-16,242	23,790	1,100	7
PRODUCTION	96	6"	I-TUBE	22"	277	-14,242	23,790	1,100	7
SERVICE	97	4"	I-TUBE	18"	277	-13,242	23,790	1,100	7
PRODUCTION	99	6"	I-TUBE	22"	277	-11,242	23,790	1,100	7
SERVICE	100	2,5"	I-TUBE	18"	277	-10,242	23,790	1,100	7
PRODUCTION	102	6"	I-TUBE	22"	277	-8,242	23,790	1,100	7
GAS EXPORT	104	11,13"	I-TUBE	30"	277	-6,042	23,790	1,100	7

Notes:

1- Azimuth from true north (clockwise).
2- Coordinates of support for fixed support and coordinates for bellmouth for i-tube support.

The Figure 1 shows the coordinates system used to define the X, Y and Z locations.

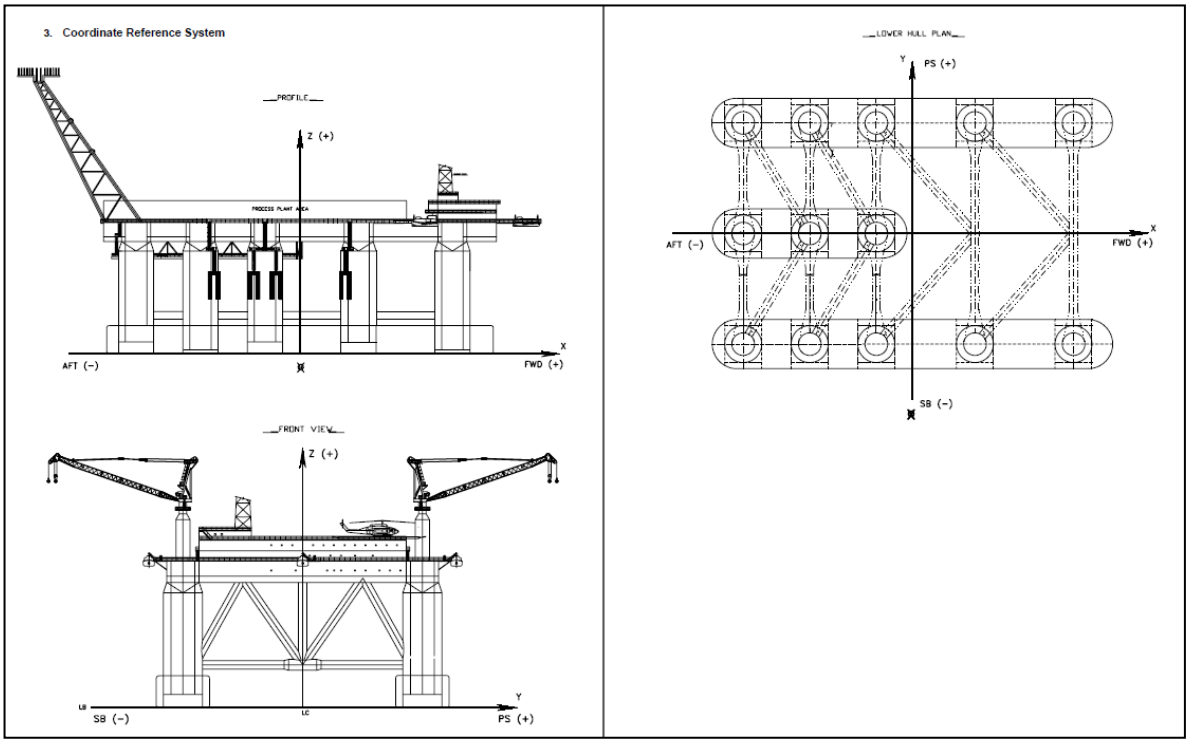

Figure 1 - Coordinates system reference for support coordinates P-40.

c) Bend Stiffener Interface Drawing

Ref.	Designation	Title	Ed.
[15]	I-ET-3010.00-1300-279-PPC-001	Bell Mouth Supply Specification	H
[16]	DE-3010.57-6500-941-PGT-009	P-40 – PB-200 Bell Mouth System for 4” and Umbilical Risers	0
[17]	DE-3010.57-6500-941-PGT-010	P-40 – PB-200 Bell Mouth System for 6” Riser	0

INTERNA

INTERNA \ Qualquer Usuário

d) Topside Interface – Spool and Upper I-tube Flange Dimension

Table 2 - Spool and Upper I-tube Flange Dimension P-40.

P-40					
Function	**Internal Diameter Riser**	**Top Riser Flange**	**Topside Spool Flange**	**Internal Diameter (mm)**	**Height "A" (mm)**
WATER INJECTION	6”	7 1/16" API 17SS 5000 psi BX-156	7 1/16" API 17SV 5000 psi BX-156	152,4	808,0 ± 2,5

“A” - distance between I-tube flange face and end-fitting flange face after assembling, as shown in Figure 2.

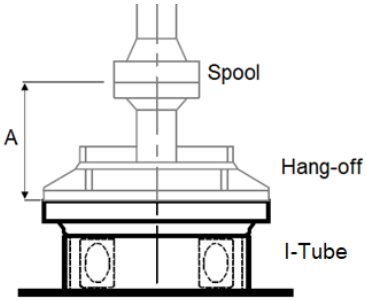

Figure 2 - Hang-off assembling sketch P-40.

Table 3 - Hang-off interface P-40.

Function	Internal Diameter Riser	Upper I-Tube	
		Flange	**Flange Thickness (mm)**
Water Injection	6”	22” – MSS-SP44, 150 psi, Flat Face with number of bolt holes reference [17]	19

e) Top Annulus Venting System

Not applicable.

f) Riser Interface Loads

Ref.	Designation	Title	Ed.
[18]	RL-3010.57-1519-941-HHO-001	Relatório de Cargas nos Suportes dos Risers Instalados na SS P-40 / Marlim Sul	0

g) Mooring Analysis - Offsets

Table 4 - Offsets P-40.

Condition	Offset	Error Position
Annual	20,06 m	1,5% WD + 7,5 m
Centenary Intact	30,15 m	1,5% WD + 7,5 m
Centenary Damaged	38,33 m	1,5% WD + 7,5 m

h) Vessel Motion Analysis

Ref.	Designation	Title	Ed.
[19]	RL-3010.57-1320-940-ABU-002	Modelo de Movimentos	F

Table 5 - Draft Frequency P-40.

Condition	Frequency
Operational (20,75m)	100%

3.2.2. P-48

a) Support Drawing

Ref.	Designation	Title	Ed.
[20]	DE-3916.00-1500-942-PMU-012	FPSO P-48 – Posição dos Suportes	AG

b) Top Annulus Venting System

To be informed during the contract execution.

c) Riser Azimuth, Top Angle and Support Coordinates

Ref.	Designation	Title	Ed.
[21]	-	Support Information P-48.xlsx	-

d) Riser Interface Loads

Ref.	Designation	Title	Ed.
[22]	RL-3010.59-1519-941-HHO-001	Relatório de Cargas nos Suportes dos Risers Instalados no FPSO P48 / Caratinga	F

e) Mooring Analysis - Offsets

Table 6 - Offsets P-48.

Condition	Offset	Error Position
Annual	4.8% WD	1,5% Water Depth + 7,5 m
Centenary Intact	6.7% WD	1,5% Water Depth + 7,5 m
Centenary Damaged	7.3% WD	1,5% Water Depth + 7,5 m

INTERNA

INTERNA \ Qualquer Usuário

f) Vessel Motion Analysis

Ref.	Designation	Title	Ed.
[23]	RL-3010.59-1350-940-ABU-003	Modelo de Movimentos	E

Table 7 - Draft Frequency P-48.

Condition	Frequency
Fully Loaded	20%
Intermediary	40%
Ballasted	40%

3.2.3. P-51

a) Support Drawing

Ref.	Designation	Title	Ed.
[24]	DE-3912.00-1500-942-PMU-058	Plataforma P-51 Posição dos Suportes dos Risers	AJ
[25]	I-DE-3010.63-1321-140-KFE-180	T11 – Pontoon Flexible Riser Guides & Supports Arrgt. /Details Hull Outf. Structure	G
[26]	I-DE-3010.63-1320-960-PMS-001	Conical Support and Mockup for Flexible Riser	B

b) Riser Azimuth, Top Angle and Support Coordinates

Table 8 - Support Information P-51.

P-51							
Function	Support number	Ø ID (riser)	Support Azimuth[1] (°)	Support coordinates *(see [24])*			Support Top angle (°)
				X (m)	Y (m)	Z (m)	
Production	81	6”	0	7,440	22,8	1,0	7
Service	83	4”	0	10,810	22,8	1,0	7

Notes:

1- Azimuth from true north (clockwise).

INTERNA

INTERNA \ Qualquer Usuário

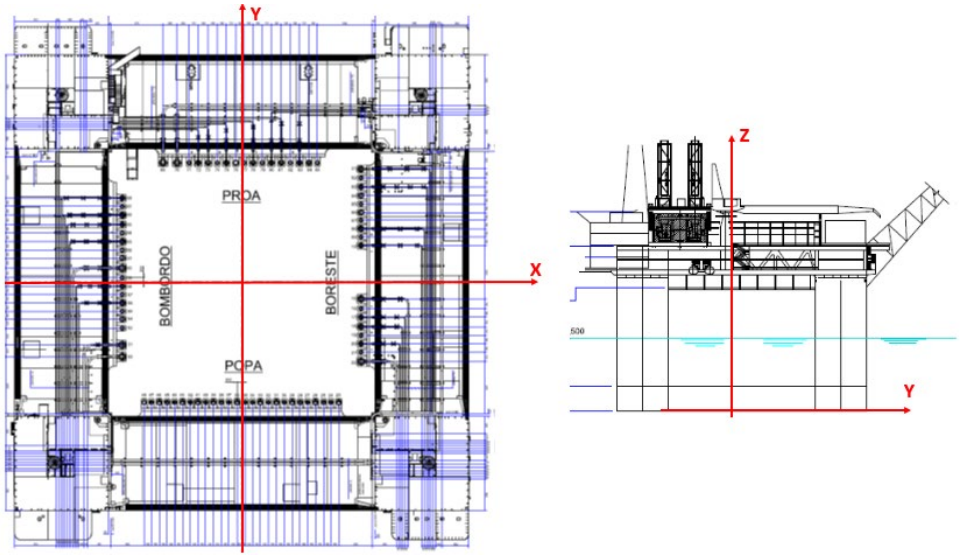

Figure 3 - Coordinates system reference for support coordinates P-51.

c) Bend Stiffener Interface Drawing

Ref.	Designation	Title	Ed.
[27]	I-LI-3010.00-1300-279-PPC-001	Part List	H

d) Top Annulus Venting System

To be informed during the contract execution.

e) Topside Interface – Spool and Upper I-tube Flange Dimension

Table 9 - Spool and Upper I-tube Flange Dimension P-51.

P-56					
Function	**Internal Diameter Riser**	**Top Riser Flange**	**Topside Spool Flange**	**Internal Diameter (mm)**	**Height "A" (mm)**
Production	6”	7 1/16" API 17SS 5000 psi BX-156	7 1/16" API 17SV 5000 psi BX-156	152,4	808 ± 2,5
Service	4”	4 1/16" API 17SS 5000 psi BX-155	4 1/16" API 17SV 5000 psi BX-155	101,6	652 ± 2,5

“A” - distance between I-tube flange face and end-fitting flange face after assembling, as shown in Figure 2.

INTERNA

INTERNA \ Qualquer Usuário

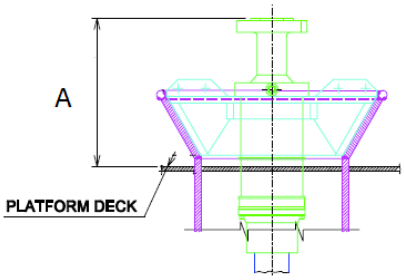

Figure 4 - Hang-off assembling sketch P-51.

Table 10 - Hang-off interface P-51.

Function	Internal Diameter Riser	Upper I-Tube	
		Flange	Flange Thickness (mm)
Production	6"	Conical Support	-
Service	4"	Conical Support	-

f) Riser Interface Loads

Ref.	Designation	Title	Ed.
[28]	RL-3010.63-1519-941-HHO-001	Relatório de Cargas nos Suportes dos Risers Instalados na SS P-51	B

g) Mooring Analysis - Offsets

Table 11 – Offsets P-51.

Condition	Offset	Error Position
Annual	2,7% WD	1,5% WD + 7,5 m
Centenary Intact	4,3% WD	1,5% WD + 7,5 m
Centenary Damaged	5,4% WD	1,5% WD + 7,5 m

h) Vessel Motion Analysis

Ref.	Designation	Title	Ed.
[29]	RL-3010.63-1320-960-DNV-002	Análise de Movimentos – Petrobras 51	C
[30]	-	RAO	-

Table 12 - Draft Frequency P-51.

Condition	Frequency
Operational	100%

INTERNA

INTERNA \ Qualquer Usuário

3.2.4. P-53

a) Support Drawing

Ref.	Designation	Title	Ed.
[31]	DE-3913.00-1500-942-PMU-022	Plataforma P-53 – Posição dos suportes dos risers	AK
[32]	I-DE-3010.66-1356-140-SBY-088	Turret Cylinder Riser I-Tubes General Arrangement - Plan	B
[33]	I-DE-3010.66-1356-140-SBY-089	Turret Cylinder Riser I-Tubes Sections & Details – Sht 1	C
[34]	I-DE-3010.66-1356-140-SBY-090	Turret Cylinder Riser I-Tubes Sections & Details – Sht 2	D
[35]	I-DE-3010.66-1356-140-SBY-091	Turret Cylinder Riser I-Tubes Sections & Details – Sht 3	C
[36]	I-DE-3010.66-1356-140-SBY-092	Turret Cylinder Riser I-Tubes Sections & Details – Sht 4	C

b) Riser Azimuth, Top Angle and Support Coordinates

Table 13 - Support Information P-53.

P-53							
Function	Support number	Ø ID (riser)	Support Azimuth[1] (°)	Support coordinates *(see [31])*			Support Top angle (°)
				X (m)	Y (m)	Z (m)	
Production	L-02	8"	309.5°	-8.47	6.20	0.000	7°
Gas Lift	L-04	4"	309.5°	-7.52	7.33	0.000	7°
Production	L-05	6"	334.0°	-7.58	8.65	0.000	9°
Gas Lift	L-07	2-½"	339.0°	-6.26	9.65	0.000	9°
Injection	L-08	6"	341.0°	-5.06	9.20	0.000	7°
Production	L-10	6"	346.0°	-3.64	9.85	0.000	7°
Gas Lift	L-12	2-½"	351.5°	-2.21	10.27	0.000	7°
Production	L-13	8"	356.0°	-1.53	11.40	0.000	9°
Gas Lift	L-14	4"	359.0°	-0.58	10.48	0.000	7°
Production	L-16	8"	5.0°	0.92	10.46	0.000	7°
Gas Lift	L-18	4"	8.0°	2.39	10.22	0.000	7°
Injection	L-19	6"	5.1°	3.43	10.98	0.000	9°
Production	L-21	6"	14.0°	5.00	10.36	0.000	9°
Production	L-23	8"	24.0°	6.51	9.48	0.000	9°
Gas Lift	L-25	4"	28.0°	7.80	8.45	0.000	9°
Injection	L-27	4"	63.0°	9.55	4.37	0.000	7°
Production	L-28	6"	82.0°	10.83	3.88	0.000	9°
Gas Lift	L-30	2-½"	87.0°	11.27	2.29	0.000	9°
Injection	L-31	6"	98.8°	10.41	1.34	0.000	7°
Gas Lift	L-33	4"	107.3°	10.50	-0.10	0.000	7°
Production	L-35	6"	107.3°	10.38	-1.59	0.000	7°
Production	L-36	8"	109.5°	11.17	-2.75	0.000	9°
Gas Lift	L-38	4"	106°	10.66	-4.33	0.000	9°
Injection	L-39	4"	130.0°	9.42	-4.64	0.000	7°

Production	L-41	8"	140.0°	8.62	-5.99	0.000	7°
Gas Lift	L-43	4"	143.0°	7.69	-7.15	0.000	7°
Injection	L-44	6"	150.0°	7.82	-8.43	0.000	9°
Gas Lift	L-46	2-½"	155.0°	6.58	-9.43	0.000	9°
Production	L-48	6"	159.0°	5.16	-10.28	0.000	9°
Production	L-49	6"	162.0°	3.85	-9.77	0.000	7°
Gas Lift	L-51	2-½"	180.0°	-0.22	-11.50	0.000	9°
Production	L-52	8"	184.0°	-1.01	-10.45	0.000	9°
Gas Lift	L-54	2-½"	190.0°	-2.48	-10.20	0.000	7°
Production	L-55	8"	199.6°	-3.58	-10.93	0.000	9°
Gas Lift	L-57	4"	199.6°	-5.12	-10.30	0.000	9°
Production	L-58	8"	209.7°	-5.38	-9.02	0.000	7°
Gas Lift	L-60	4"	209.7°	-6.60	-8.16	0.000	7°
Production	L-61	8"	219.8°	-7.91	-8.35	0.000	9°
Gas Lift	L-63	4"	219.8°	-9.03	-7.13	0.000	9°
Injection	L-64	6"	224.0°	-8.69	-5.89	0.000	7°
Injection	L-67	6"	233.0°	-10.66	-4.32	0.000	9°
Production	L-68	8"	240.5°	-10.03	-3.10	0.000	7°
Gas Lift	L-70	4"	246.0°	-10.37	-1.65	0.000	7°
Production	L-71	8"	253.5°	-11.46	-0.91	0.000	9°
Gas Lift	L-73	4"	253.5°	-11.48	0.74	0.000	9°

Notes:

1- Azimuth from true north (clockwise).

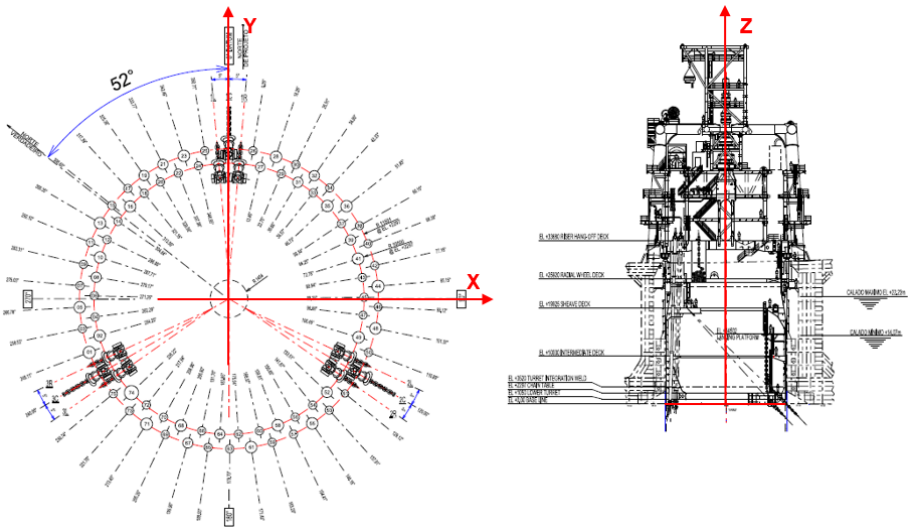

Figure 5 - Coordinates system reference for support coordinates P-53.

c) Bend Stiffener Interface Drawing

Ref.	Designation	Title	Ed.
[37]	I-LI-3010.00-1300-279-PPC-001	Part List	H

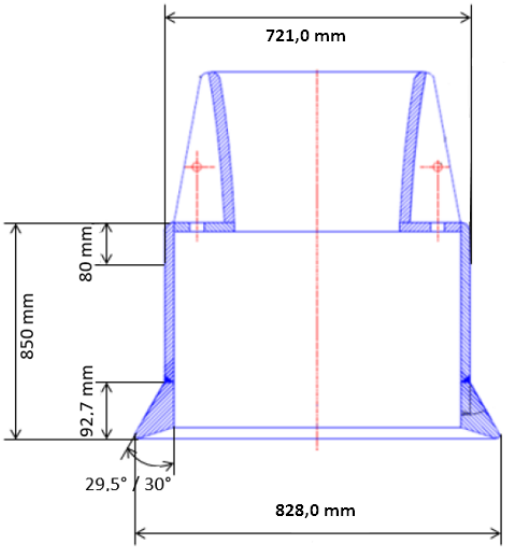

Figure 6 - Dimensions of bend stiffener cap (support 67) P-53.

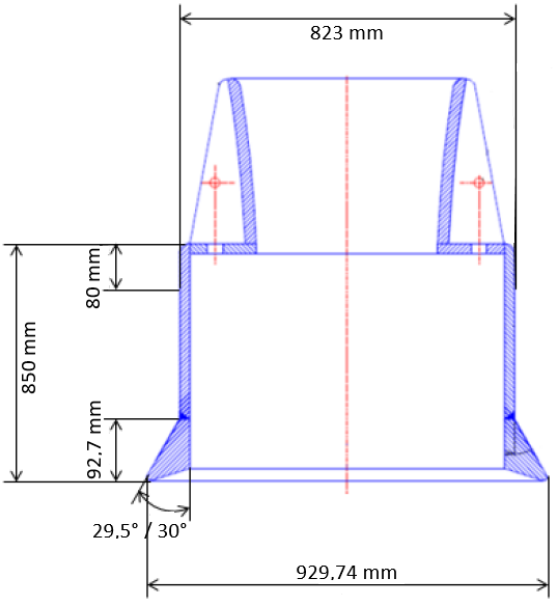

Figure 7 - Dimensions of bend stiffener cap (support 71) P-53.

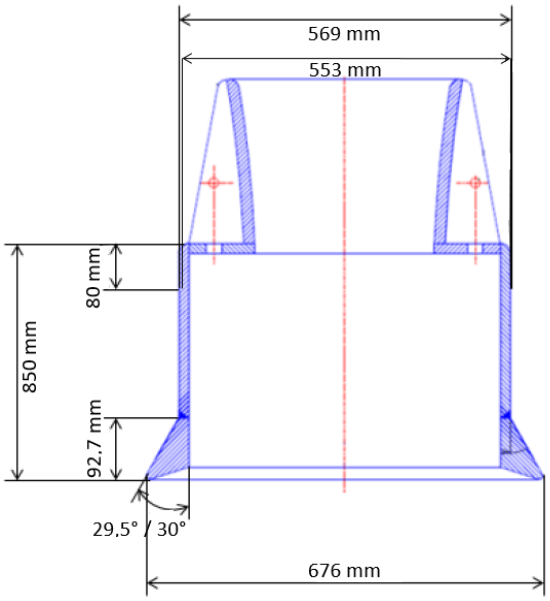

Figure 8 - Dimensions of bend stiffener cap (support 73) P-53.

d) Topside Interface – Spool and Upper I-tube Flange Dimension

Table 14 - Topside Interface – Spool interface P-53.

P-53						
Support number	**Function**	**Internal Diameter Riser**	**Top Riser Flange**	**Topside Spool Flange**	**Internal Diameter (mm)**	**Height "A" (mm)**
67	Water Injection	6”	7 1/16" API 17SS 5000 psi BX-156	7 1/16" API 17SV 5000 psi BX-156	152,4	808 ± 2,5
71	Production	6”	7 1/16" API 17SS 5000 psi BX-156	7 1/16" API 17SV 5000 psi BX-156	152,4	808 ± 2,5
73	Service	4”	4 1/16" API 17SS 5000 psi BX-155	4 1/16" API 17SV 5000 psi BX-155	101,6	652 ± 2,5

“A” - distance between I-tube flange face and end-fitting flange face after assembling, as shown in Figure 9.

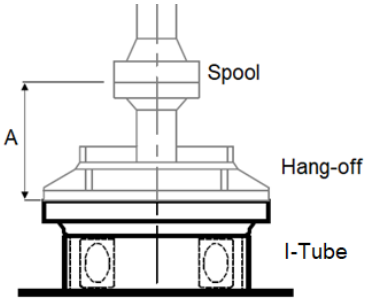

Figure 9 - Hang-off assembling sketch P-53.

Table 15 – Hang-off interface

Support number	**Function**	**Internal Diameter Riser**	**Upper I-Tube**	
			Flange	**Flange Thickness (mm)**
67	Water Injection	6"	30” MSS SP-44 CLASS 300	100,1

71	Production	6"	34” MSS SP-44 CLASS 300	100,1
73	Service	4"	24” MSS SP-44 CLASS 300	68,3

Notes:

1- Manufacture shall consider this flange thickness to define the bolt length used for hang-off assembling.

e) Top Annulus Venting System

To be informed during the contract execution.

f) Riser Interface Loads

Ref.	Designation	Title	Ed.
[38]	PEC-15247	Análise Avançada de Risers para a Plataforma P-53	2

g) Mooring Analysis - Offsets

Table 16 – Offsets P-53.

Condition	Offset	Error Position
Annual	33,5 m	1,5% WD
Centenary Intact	60,0 m	1,5% WD
Centenary Damaged	73,8 m	1,5% WD

h) Vessel Motion Analysis

Ref.	Designation	Title	Ed.
[39]	RL-3010.66-1350-960-TNA-004	Relatório do Modelo de Movimentos – Petrobras 53	B

Table 17 - Draft Frequency P-53.

Draft (m)	Frequency
Intermediate Loaded (16m)	100%

3.2.5. P-56

a) Support Drawing

Ref.	Designation	Title	Ed.
[40]	I-DE-3010.71-1321-140-KFE-180	T11 – Pontoon Flexible Riser Guides & Supports Arrgt. /Details Hull Outf. Structure	C
[41]	I-DE-3010.71-1321-140-KFE-380	T31 – Pontoon Flexible Riser Guides & Supports Arrgt. /Details Hull Outf. Structure	D
[42]	I-DE-3010.71-1321-140-KFE-480	T41 – Pontoon Flexible Riser Guides & Supports Arrgt. /Details Hull Outf. Structure	C

INTERNA

INTERNA \ Qualquer Usuário

Ref.	Designation	Title	Ed.
[43]	I-DE-3010.71-1320-960-PMS-001	Conical Support and Mockup for Flexible Riser	C
[44]	DE-3912.00-1500-942-PMU-119	Plataforma P-56 Posição dos Suportes dos Risers	AB

b) Riser Azimuth, Top Angle and Support Coordinates

Table 18 - Support data P-56.

P-56							
Function	Support number	Ø ID (riser)	Support Azimuth[1] (°)	Support coordinates *(see references Figure 10)*			Support Top angle (°)
				X (m)	Y (m)	Z (m)	
OIL PRODUCTION	23	6”	180	18,165	-22,8	1,0	7
SERVICE	25	4”	180	15,345	-22,8	1,0	7
WATER INJECTION	61	6"	270	-22,8	4,59	1,0	7
OIL PRODUCTION	81	6”	0	7,440	22,8	1,0	7
SERVICE	83	4”	0	10,810	22,8	1,0	7

Notes:

1- Azimuth from true north (clockwise)
2- For flexible riser azimuth and top angle for neutral position: see Subsea Layout (item 3.1).
3- Azimuth and top angle indicated above refer to bellmouth project. Flexible riser can be installed with azimuth and top angle different from top angle and azimuth of bellmouth project.

The Figure 10 shows the coordinates system used to define the X, Y and Z locations.

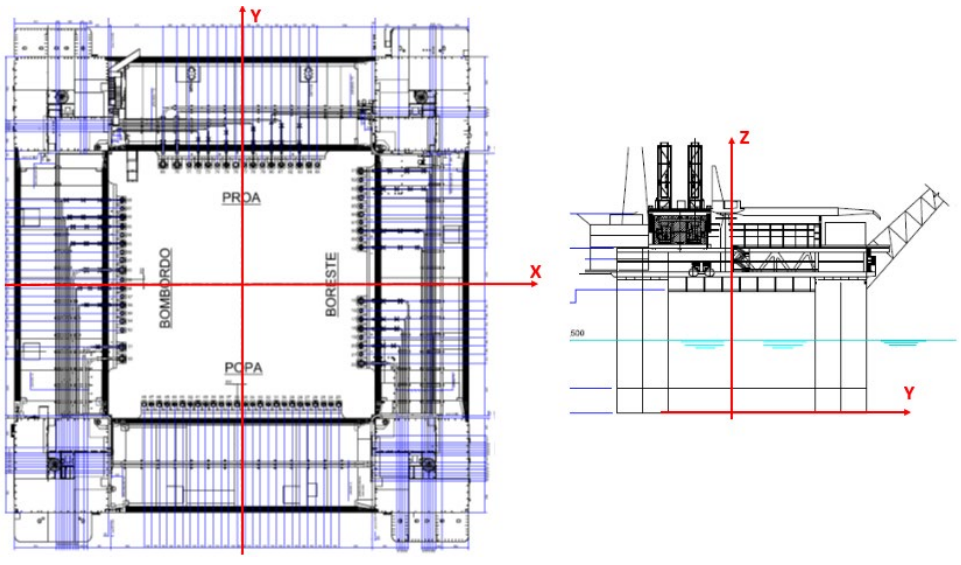

Figure 10 - Coordinates system reference for support coordinates P-56.

c) Bend Stiffener Interface Drawing

Ref.	Designation	Title	Ed.
[45]	I-LI-3010.00-1300-279-PPC-001	Part List	H

d) Topside Interface – Spool and Upper I-tube Flange Dimension

Table 19 - Spool and Upper I-tube Flange Dimension P-56.

P-56					
Function	**Internal Diameter Riser**	**Top Riser Flange**	**Topside Spool Flange**	**Internal Diameter (mm)**	**Height "A" (mm)**
Production	6”	7 1/16" API 17SS 5000 psi BX-156	7 1/16" API 17SV 5000 psi BX-156	152,4	808 ± 2,5
Service	4”	4 1/16" API 17SS 5000 psi BX-155	4 1/16" API 17SV 5000 psi BX-155	101,6	652 ± 2,5

“A” - distance between I-tube flange face and end-fitting flange face after assembling, as shown in Figure 11.

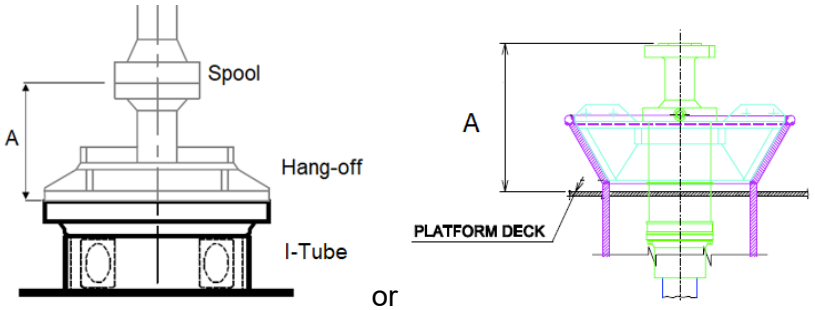

Figure 11 - Hang-off assembling sketch P-56.

Table 20 - Hang-off interface P-56.

Function	**Internal Diameter Riser**	**Upper I-Tube**	
		Flange	**Flange Thickness (mm)**
Production	6"	Conical Support	-
Service	4"	Conical Support	-
Production	6"	Flange 30” MSS-SP-44 CLASS 150psi	50
Service	4"	Flange 26” MSS-SP-44 CLASS 150psi	50
Water Injection	6”	Flange 30” MSS-SP-44 CLASS 150psi	50

e) Top Annulus Venting System

To be informed during the contract execution.

f) Riser Interface Loads

Ref.	Designation	Title	Ed.
[46]	RL-3010.71-1519-941-HHO-001	Relatório de Cargas nos Suportes dos Risers Instalados na SS P-56 / Marlim Sul	C

g) Mooring Analysis - Offsets

Ref.	Designation	Title	Ed.
[47]	I-RL-3010.71-1320-960-TKP-651	Mooring Analysis	C

INTERNA

INTERNA \ Qualquer Usuário

h) Vessel Motion Analysis

Ref.	Designation	Title	Ed.
[48]	RL-3010.71-1320-960-DNV-002	Análise de Movimentos - PETROBRAS 56	0

Table 21 - Draft Frequency P-56.

Condition	Draft	Frequency
ANNUAL	2,7% WD	1,5% WD + 7,5 m
CENTENARY INTACT	4,3% WD	1,5% WD + 7,5 m
CENTENARY DAMAGED	5,4% WD	1,5% WD + 7,5 m

3.2.6. P-58

a) Support Drawing

Ref.	Designation	Title	Ed.
[49]	DE-3600.00-1500-942-PMU-029	Plataforma FPSO P-58 Posição dos Suportes dos Risers	J
[50]	I-DE-3010.78-1352-140-PPC-001	Riser & Bell-Mouth Structural Arrangement	C
[51]	I-DE-3010.78-1350-140-TKP-162	Upper Riser Support I-Tube Detail	B
[52]	I-DE-3010.78-1352-140-PPC-003	Lower Riser Support Structure and Foundation	D
[53]	I-DE-3010.78-1300-279-PPC-085	Dummy Cap to BSN 900E	A

b) Riser Azimuth, Top Angle and Support Coordinates

Ref.	Designation	Title	Ed.
[54]	-	Support Information P-58.xlsx	-

c) Top Annulus Venting System

To be informed during the contract execution.

d) Riser Interface Loads

Ref.	Designation	Title	Ed.
[55]	I-RL-3010.78-1352-274-PPC-001	Riser Interface Loads	C

INTERNA

INTERNA \ Qualquer Usuário

e) Mooring Analysis - Offsets

Table 22 - Offsets P-58.

Condition	Offset	Error Position
Annual	105,0 m	1,5% WD+ 7,5 m
Centenary Intact	126,4 m	1,5% WD + 7,5 m
Centenary Damaged	134,4 m	1,5% WD + 7,5 m

f) Vessel Motion Analysis

Ref.	Designation	Title	Ed.
[56]	I-RL-3010.78-1350-960-TKP-804	Motion Analysis	B
[57]	CT TEO 010 /2021	RAO Tables for Petrobras 58 Production Unit	0
[58]	RAO_TKP_wamit_out.zip	Saídas do programa wamit com os dados de RAO da P-58	B

3.2.7. FPSO Anna Nery

a) Support Drawing

Ref.	Designation	Title	Ed.
[59]	1801-LMAR-91-N-XG-00006	Upper Riser Balcony Structure	C2
[60]	1801-LMAR-91-N-XG-00007	Lower Riser Balcony Structure	C2

b) Riser Azimuth, Top Angle and Support Coordinates

FPSO Anna Nery							
Function	Support number	Ø ID (riser)	Support Azimuth[1] (°)	Support coordinates *(see [31])*			Support Top angle (°)
				X (m)	Y (m)	Z (m)	
PRODUCTION	9	6"	251,3	48.32	31.92	1.6	9
SERVICE	11	4”	254,9	43.89	31.92	1.6	9
PRODUCTION	46	6"	71,4	-36.87	32.05	1.6	7
SERVICE	44	4”	75	-32.51	32.06	1.6	7
PRODUCTION	28	6"	296,8	4.52	31.93	1.6	7
SERVICE	30	4”	300,4	-0.06	31.93	1.6	7
PRODUCTION	19	6"	103,2	25.50	32.07	1.6	7
SERVICE	17	4”	106,2	29.98	32.07	1.6	7
PRODUCTION	33	6"	305,8	-7.10	31.93	1.6	7
SERVICE	35	4”	309,4	-11.50	31.93	1.6	7
PRODUCTION	49	6"	66	-43.79	32.06	1.6	7
SERVICE	47	4”	69,6	-39.26	32.06	1.6	7
PRODUCTION	43	9"	76,8	-30.00	32.06	1.6	7

INTERNA

INTERNA \ Qualquer Usuário

PRODUCTION TEST	40	6"	81,8	-23.24	32.07	1.6	7
SERVICE	39	6"	83,3	-20.81	32.07	1.6	7
SERVICE TEST	41	8"	80,3	-25.62	32.07	1.6	7
PRODUCTION	12	9"	256,7	41.54	31.92	1.6	9
PRODUCTION TEST	15	6"	261,8	34.94	31.92	1.6	9
SERVICE	16	6"	263,4	32.35	31.91	1.6	9
SERVICE TEST	14	8"	260,2	37.27	31.92	1.6	9
PRODUCTION	23	9"	283,6	16.66	31.93	1.6	7
PRODUCTION TEST	26	6"	293,2	9.60	31.93	1.6	7
SERVICE	27	6"	295	7.03	31.93	1.6	7
SERVICE TEST	25	8"	291,4	12.11	31.93	1.6	7
PRODUCTION	54	9"	57	-55.95	32.06	1.6	9
PRODUCTION TEST	51	6"	62,4	-48.89	32.07	1.6	9
SERVICE	50	6"	64,2	-46.32	32.07	1.6	9
SERVICE TEST	52	8"	60,6	-51.41	32.07	1.6	9
WATER INJECTION	38	8"	84,8	-18.37	32.07	1.6	7
WATER INJECTION	37	8"	313	-15.83	31.92	1.6	9
WATER INJECTION	22	8"	281,8	19.05	31.93	1.6	7
GAS EXPORT	31	8”	302,2	-2.5	31.93	1.6	7
WATER INJECTION	8	6”	106,5	50,8	32,07	1,6	7

Notes:

1- Azimuth from true north (clockwise)
2- For flexible riser azimuth and top angle for neutral position: see Subsea Layout (item 3.1).
3- Azimuth and top angle indicated above refer to bellmouth project. Flexible riser can be installed with azimuth and top angle different from top angle and azimuth of bellmouth project.

Figure 2 shows the coordinate system used to define the X, Y and Z locations of Anna Nery.

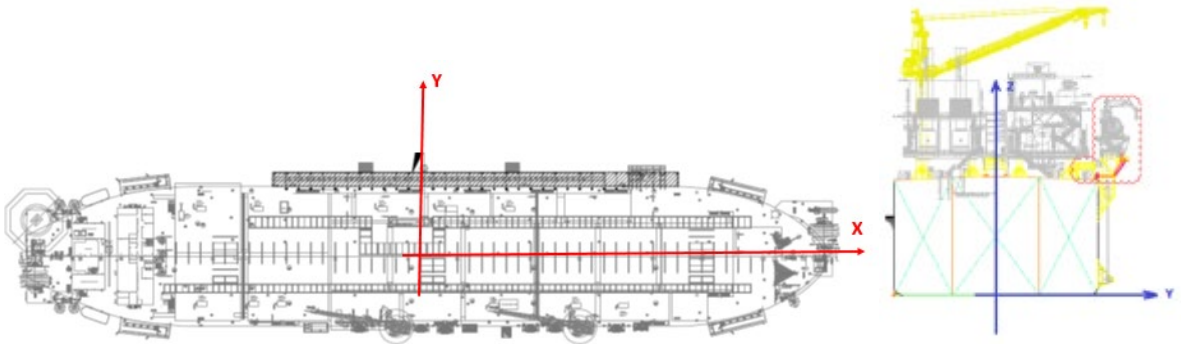

Figure 12 - **Coordinate system reference for support coordinates – Anna Nery**

c) Bend Stiffener Interface Drawing

Ref.	Designation	Title	Ed.
[61]	I-LI-3010.00-1300-279-PPC-003	Part List - Bend Stiffener Lock System	H

d) Topside Interface – Spool and Upper I-tube Flange Dimension

Table 23 - Topside Interface – Spool interface Anna Nery.

Internal Diameter Riser	Top Riser Flange	Topside Spool Flange	Internal Diameter (mm)	Height "A" (mm)
4" or 6"	7 1/16" API 6BX 10.000 psi BX-156	7 1/16" API 17SV 10.000 psi BX-156	152,40	810 ± 2,50
8"	9" API 6BX 10.000 psi BX-157	9" API 17SV 10.000 psi BX-157	203,20	960 ± 2,50
9,125"	11" API 17SS 5.000 psi BX-158	11" API 17SV 5.000 psi BX-158	231,78	960 ± 2,50
11”	13 5/8" API 17SV 5000 psi BX-160	13 5/8" API 17SV 5000 psi BX-160	282.58	1000 ± 2.5

“A” - distance between I-tube flange face and end-fitting flange face after assembling, as shown in Figure 9.

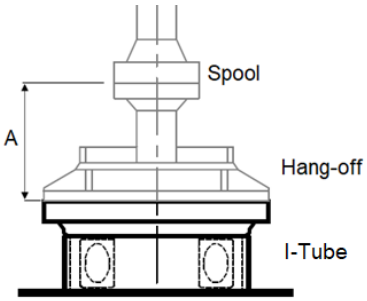

Figure 13 - Hang-off assembling sketch Anna Nery.

Table 24 – Hang-off interface

Function	Internal Diameter Riser	Upper I-Tube	
		Flange	Flange Thickness (mm)
Production	6" or 9,125”	40" FFWN 300# (Flat ace Weld Neck Classe de Pressão 300 psi)	112,8
Service	4”		
Water Injection	8”		
Production Test	6”		
Service Test	8”		
Gas Export	8” or 9,125”		

Notes: Manufacture shall consider this flange thickness to define the bolt length used for hang-off assembling.

e) Top Annulus Venting System

For Top Annulus Venting System, the manufacture shall consider the use of Continuous Vented System. The manufacturer shall supply one vent valves and two free vent adaptors. All the interfaces shall be 3/8” NPT male.

f) Riser Interface Loads

Ref.	Designation	Title	Ed.
[62]	1801-DNV2-94-J-CA-00002	Wave Load Analysis Report (Anna Nery)	B1
[63]	1801-DNV2-94-J-CA-00001	Riser Top Interface Load Analysis Report (Anna Nery)	A1

INTERNA

INTERNA \ Qualquer Usuário

g) Mooring Analysis - Offsets

Table 25 – Offsets Anna Nery.

Condition	Offset Limit (% OF WATER DEPTH)	Error Position
ANNUAL	8% LDA	7,5 m
CENTENARY INTACT	12% LDA	7,5 m
CENTENARY DAMAGED	12,5% LDA	7,5 m

h) Vessel Motion Analysis

Ref.	Designation	Title	Ed.
[64]	1801-LONG-91-J-RA-00002_C2	Motion Analysis Report (Anna Nery)	C2

Table 26 - Draft Frequency Anna Nery.

Draft (m)	Frequency
FULL	17%
INT1	33%
INT2	33%
BALLAST	17%

3.3. Subsea Equipment

To be informed for each specific project during the contract execution.

3.4. Soil Data

Ref.	Designation	Title	Ed.
[65]	I-ET-3010.00-1500-960-PPC-012	Technical Specification of Soil Parameters for Flexible Pipe Design	0
[66]	RL-3600.00-1500-941-PIP-001	Caracterização do Fundo Marinho para Especificação Técnica em Processo de Compra de Linhas Flexíveis	0

3.5. Metocean Data

Ref.	Designation	Title	Ed.
[67]	I-ET-3000.00-1000-941-PPC-001	Metocean Data - Offshore Systems and Units - Campos Basin	F
[68]	I-ET-3010.72-1000-941-PPC-001	Jubarte Field Development- Phase 2 - FPSO BR P-57	0
[69]	I-ET-3673.00-1000-941-PPC-001	Metocean Data - Offshore Systems and Unities - Parque das Baleias	C

INTERNA

INTERNA \ Qualquer Usuário

3.6. Riser Parameters

All risers shall be designed to be installed in free-hanging configuration.

3.7. Internal Fluid Parameters and Chemical Injection

Ref.	Designation	Title	Ed.
[70]	ET-3010.72-1500-941-PFS-001	Caracterização dos Fluidos Deslocados do Poço RO300.P6	B
[71]	ET-3010.78-1500-941-PFS-006	Caracterização dos Fluidos Deslocados no Projeto ES0095	D
[72]	ET-3668.00-1210-941-PFS-001	Caracterização dos Fluidos e Escoamentos dos Poços do PID Jubarte - Etapa II	C
[73]	ET-3500.00-1500-941-1EF-001	Caracterização dos Fluidos Deslocados do Projeto de Desenvolvimento Integrado de Barracuda e Caratinga	C
[74]	ET-3912.00-1500-941-1DL-009	Caracterização dos Fluidos Deslocados - Poço B30P2 Interligado a P-56 - Projeto RJ-1037 Integrado ao RJ-0465	D
[75]	ET-3912.00-1500-941-1DL-010	Caracterização dos Fluidos Deslocados nos Poços B4P2, B32P2 E B32P3 do Projeto RJ1310, Integrado ao Projeto RJ0465	B
[76]	ET-3912.00-1500-941-1HA-002	Caracterização dos Fluidos Deslocados no Poço MP2 (Produtor P-56) e no Poço IM2 (Injetor P-40) do Plano Integrado RJ0465	B
[77]	ET-3912.00-1500-941-PMS-144	Caracterização dos Fluidos Deslocados no Poço MLS-133	A
[78]	ET-3913.00-1500-941-1HA-002	Caracterização dos Fluidos Deslocados nos Poços O2P3, LOC1 e ISW (P-53) do Projeto RJ0488	D
[79]	ET-3913.00-9310-940-1HA-001	Caracterização dos Fluidos Deslocados no Projeto RJ1072 – Desenvolvimento da Produção Norte de Tracajá	0
[80]	ET-3010.1R-1500-941-1HK-001	Caracterização dos Fluidos Deslocados no Gasoduto Secundário de FPSO Anna Nery	B

4. SCOPE OF FLEXIBLE PIPES AND COMPONENTS

Ref.	Designation	Title	Ed.
[81]	LI-3000.00-1519-291-PZ9-077	Escopo de Contratação de Dutos Flexíveis para Projetos Petrobras (PJI-564)	0

5. ADDITIONAL REQUIREMENTS

In case manufacturer indicates the need of any lubricant or chemical product for the assembly of the supplied accessories, PETROBRAS requires that one or more of the products at Table 27 should be selected by the manufacturer.

INTERNA

INTERNA \ Qualquer Usuário

Table 27 – Products.

Commercial Description
ARALDITE
FOSPOX SF UNIVERSAL P235
LOCTITE 242
LOCTITE 270
LOCTITE 271
LOCTITE 567
LOCTITE 577
LUBRAX LITH EP2
MOLIKOTE D (Lumobras Molykote-DC-0)
MOLIKOTE G-RAPID PLUS
MOLYKOTE P-40

6. REQUIRED TECHNICAL DOCUMENTATION AND SCHEDULE

The technical documentation listed in the Table 28 shall be submitted to Petrobras at informed times and comply with the requirements presented in the reference documents.

Table 28 - Document requirements and timeline for supply of products.

	Document	Reference Document	Time for Delivery
Proposal	Responsibility Term	Annex III of I-ET-3000.00-1519-291-PAZ-008	With the commercial proposal
	Design Basis	Section 13 of I-ET-3000.00-1519-291-PAZ-008	With the commercial proposal or up to 570 days before the delivery date.
	Design Basis Review	Section 9.1 of I-ET-3000.00-1519-291-PAZ-003	With the commercial proposal or up to 570 days before the delivery date.
	Design Premise	Section 2 of I-ET-3000.00-1519-291-PAZ-008	With the commercial proposal or up to 570 days before the delivery date.
	Price sheet (scope of materials)	-	With the commercial proposal
Project execution	Composition Drawings	-	up to 365 days before the delivery date.
	Accessory drawings	-	up to 150 days before the delivery date.
	Design Report	Section 4 of I-ET-3000.00-1519-291-PAZ-008	60 days prior to delivery
	Operation Manual	Section 9 of I-ET-3000.00-1519-291-PAZ-008	60 days prior to delivery
	Handling and Installation Manual	Section 10 of I-ET-3000.00-1519-291-PAZ-008	60 days prior to delivery
	Independent Review Certificate	Section 9.2 of I-ET-3000.00-1519-291-PAZ-003	Prior to delivery
	Production Test Procedures	Section 8.1 of API Spec 17J	Prior to test runs
	Production Test Reports	Section 8.1 of API Spec 17J	Prior to delivery (See Note 1)

Note 1: For pressure and tensile armors, only material batches previously approved in HIC and SSCC Production Tests shall be used in the manufacture of the pipe.

INTERNA

INTERNA \ Qualquer Usuário

Purchase Orders shall only be issued after the following:

a) Design Basis has been presented by the manufacturer and approved by Petrobras.
b) Design Basis Review has been presented by the manufacturer and accepted by Petrobras.
c) Design Methodology Verification Report has been available to be checked with the Design Basis Review and accepted by Petrobras, as per I-ET-3000.00-1519-291-PAZ-008.
d) Design Premise has been presented by the manufacturer and approved by Petrobras.
e) Design Basis will only be accepted with the associated IVA Design Basis Review indicating that the products are adequate to the functional and design requirements and in line with validated or acceptable design methodologies. The Design Methodology Verification Report shall be available to be checked with the Design Basis Review.

INTERNA

INTERNA \ Qualquer Usuário